大華高科股份有限公司
www.taiwah.com.tw info@taiwah.com.tw
台北 TEL: (02)2592-5119 FAX: (02)2592-3577
台中 TEL: (04)2707-2269 FAX: (04)2707-1799
台南 TEL: (06)243-2338 FAX: (06)243-2339

JUMO heatTHERM-AT and JUMO heatTHERM-DR

Type 603070, Surface-Mounted or Room Thermostat Versions

Type 603070/0170 (TR/STB)

Type 603070/0001 (TR)

Type 603070/ 0002 (TW)

Type 603070/0002 (TW)

Special features

- PUSH IN-connection technology - **reduced installation time by 50 %**
- Stable switching point position due to ambient temperature compensation (standard)
- Max. switching capacity 16 A, 230 V
- Tested according to DIN EN 14597
- Operating life at least 250,000 switching cycles for TR and TW
- Switching point deviation during the entire operating life of up to ± 5 %
- Protection type max. IP54
- UL approval (extra code 061)

Brief description

High application flexibility and the latest connection technology are the essential equipment features of this new thermostat series.

The thermostat case is suitable for all common installation types such as wall mounting, immersion sleeve, and contact fastening. It can be used universally and reduces the variant range because different mounting types must no longer be taken into account.

The JUMO heatTHERM-DR (type 7+8) type is a specific variation with a special housing bottom section for DIN rail or wall mounting. As a result, easy mounting on mounting rails TH35 according to DIN EN 60715 (e.g. in control cabinets) is possible. This variant considerably reduces the mounting time. The flue gas automatic reset temperature limiter JUMO heatTHERM-AT locks the gas/oil vessel that is connected in parallel with the wood vessel to a chimney.

For these international innovative surface-mounted thermostats with "Push-In®" terminal technology, the connection wires are only inserted into the terminal point up to the stop - that's it! No tool is required for connecting the wire or strand with a ferrule and the wiring becomes safer. In this manner, the costs and time required for connection are considerably reduced compared to the conventional screw terminal.

The "Push-In®" terminal technology allows direct switching of loads up to 16 A at 230 V AC. The installation costs can be reduced further because a load contactor is no longer required.

Available are temperature controllers (TR), temperature monitors (TW), safety temperature monitors (STW), safety temperature limiters (STB) as single or double thermostats, and flue gas temperature monitors (ATW).

Approvals according to DIN EN 14597, DGRL, and UL indicate the high quality standards for this product series.

Approvals/approval marks (see "Technical Data")

Design type 5+6* Design type 7+8*

* Only with extra code 061

大華高科股份有限公司
www.taiwah.com.tw info@taiwah.com.tw
台北 TEL: (02)2592-5119 FAX: (02)2592-3577
台中 TEL: (04)2707-2269 FAX: (04)2707-1799
台南 TEL: (06)243-2338 FAX: (06)243-2339

Technical data

Switching function

Temperature controller TR / temperature monitor TW	If the temperature on the temperature probe exceeds the setpoint value, the microswitch is activated by the transmission mechanics and the electrical circuit is opened or closed. If the temperature falls below the selected setpoint value (by the amount of the switching differential), the microswitch is reset to its initial position.
Safety temperature monitor STW	If the temperature on the temperature probe exceeds the setpoint value, the snap-action switch is activated and the electrical circuit is opened or closed. If the temperature falls below the selected setpoint value (by the amount of the switching differential), the snap-action switch is reset to its initial position. The electrical circuit 1-2 opens when the probe of STW (STB) and STB cools down to the negative temperature range, but it closes again automatically if the temperature rises. If the measuring system is destroyed (i.e. if the expansion fluid emerges) the pressure in the diaphragm drops and permanently opens the electrical circuit.
Safety temperature limiter STB	If the temperature on the temperature probe exceeds the switching point, the snap-action switch is activated, the electrical circuit is opened or closed, and the snap-action switch is mechanically locked. The unlocking difference depends on the control range. Exact values are available from the respective types. They are also available upon request. If the temperature falls below the selected setpoint value (by the amount of the unlocking difference) then the snap-action switch can be manually unlocked again. The electrical circuit 1-2 opens when the probe of STW (STB) and STB cools down to the negative temperature range, but it closes again automatically if the temperature rises. If the measuring system is destroyed (i.e. if the expansion fluid emerges) the pressure in the diaphragm drops and permanently opens the electrical circuit. Unlocking is no longer possible.

Temperature compensation

When the ambient temperature on the switching head and the capillary deviates — from the calibration ambient temperature of +22 °C — a switching point offset occurs. This switching point offset is reduced to a minimum due to the temperature compensation.

大華高科股份有限公司
www.taiwah.com.tw info@taiwah.com.tw
台北 TEL: (02)2592-5119 FAX: (02)2592-3577
台中 TEL: (04)2707-2269 FAX: (04)2707-1799
台南 TEL: (06)243-2338 FAX: (06)243-2339

Technical data

Case

	Type 5 + 6	Type 7 + 8
Case	Case bottom section:	PA (reinforced)
	Color:	Silver-gray RAL 7001 (for TZ 061 black)
	Case lid: ABS with inspection glass (PMMA) Color: cobalt-blue RAL 5013 (for TZ 061 light-gray, RAL 7035)	
Setpoint adjustment		
TR	Switching point can be adjusted externally with the rotary knob.	- -
TW, STW, STB, ATW	Switching point can be adjusted with a screwdriver once the case lid has been removed. The set switching point can be checked through the inspection glass.	Switching point can adjusted with a screwdriver.
Protection type	IP40 or IP54 (for TZ 402) according to EN 60 529	IP20 according to EN 60 529
Cable inlet	Cable gland M20 x 1.5, for cable-∅ 6-12 mm	Cable connection directly on PUSH IN terminals
Capillary	∅ 1.25 mm - min. bending radius of the capillary 5 mm - material: copper (Cu) or stainless steel (CrNi, 1.4301)	
Case fastening	Pipe mounting with clamping belt for pipe diameter 15-100 mm, thermowell mounting, wall mounting	Wall mounting, DIN rail installation TH35 according to DIN EN 60715
Weight	Approx. 0.2 kg	

Electrical data

Electric contact	Snap-action switch with single-pole changeover contact	
Switching capacity	TR / TW / STW / ATW	STB
	On the N/C contact (contact deck 1-2): AC 230 V +10 %, 16 (2.5) A, cos φ = 1 (0.6), DC 230 V +10 %, 0.25 A On the N/O contact (contact deck 1-4): AC 230 V +10 %, 6.3 (2.5) A, cos φ = 1 (0.6), DC 230 V +10 %, 0.25 A	On the N/C contact (contact deck 1-2): AC 230 V +10 %, 16 (2.5) A, cos φ = 1 (0.6), DC 230 V +10 %, 0.25 A On the signal contact (contact deck 1-4): AC 230 V +10 %, 2 (04) A, cos φ = 1 (0.6), DC 230 V +10 %, 0.25 A
Electrical connection	PUSH IN contact (plug-type terminal) "Push-In®" terminal technology: patented connection technology by Weidmüller GmbH & Co. KG, Detmold, Germany	
Connection cross section	0.75 to 2.5 mm^2 fine wired (single-wire, fine wired with ferrule)	
Switching reliability	To ensure the greatest possible switching reliability, we recommend a minimum load of: AC / DC = 24 V, 100 mA for silver contacts AC / DC = 10 V, 5 mA for gold-plated contacts (TZ 702)	

大華高科股份有限公司
www.taiwah.com.tw info@taiwah.com.tw
台北 TEL: (02)2592-5119 FAX: (02)2592-3577
台中 TEL: (04)2707-2269 FAX: (04)2707-1799
台南 TEL: (06)243-2338 FAX: (06)243-2339

Operating data

Switching point accuracy	TR, TW	STW, STB with a setting range of:			
		+20 °C to +80 °C		+70 °C to +130 °C	
	Switching differential 2.5%	In the "first half" (+20 °C to +50 °C)	In the "second half" (+50 °C to +80 °C)	In the "first half" (+70 °C to +100 °C)	In the "second half" (+100 °C to +130 °C)
	In the upper third of the scale ± 3 %, at scale beginning ± 6 %	+0/-8 K	+0/-5 K	+0/-12 K	+0/-5 K
Temperature compensation	When the ambient temperature on the switching head and the capillary deviates — from the calibration ambient temperature of +22 °C — a switching point offset of approx. -0.1 K/K occurs (switching point change referring to the ambient temperature change, measured at limit value +120 °C permanently set and capillary length 2,000 mm). This switching point offset is reduced to a minimum due to the standard temperature compensation.				
Limit value temperatures	For transport and storage: - 30 °C to (see maximum temperatures during operation)				
	During use: 0 °C to +80 °C, for TZ 061 UL approval max. +65 °C (type 7 max. 55 °C; type 6+8 max. +50 °C)				
	For pipe mounting: max. pipe temperature +120 °C				
Rated position	According to DIN 16257, rated position 0 to rated position 90 (different rated positions upon request)				

Approvals/approval marks

Approval marks	Inspection authority	Certificates/certification number	Inspection basis	Valid for
DIN	DIN CERTCO	TR1191, TW1192, STW(STB)1193, STB1194, ATW1218	DIN EN 14597	JUMO heatTHERM-AT/-DR according to type
DIN	TÜV Süd (German Technical Inspection Agency)	DIN EN ISO 13849-1	B_{10d} = 250,000[a]	JUMO heatTHERM-AT/-DR
PED	TÜV Süd	Z-IS-TAF-MUC-18-05-2652099-02162623	2014/68/EU	JUMO heatTHERM (STW(STB)/STB)
UL	UL Germany	E 66358	UL 873	JUMO heatTHERM-AT/-DR
EAC[b]	Gost Norm AG	TC RU C-DE.AB98.B.00348	Technical rules of the customs union Russia/Belarus/Kazakhstan	JUMO heatTHERM-AT/-DR

[a] For further details see: Safety manual JUMO heatTHERM (-AT), (-DR) 602031, 603070.
Contact rating check conducted at 16 A, 230 V, resistive load.

[b] Russian documentation upon request

Wiring diagrams

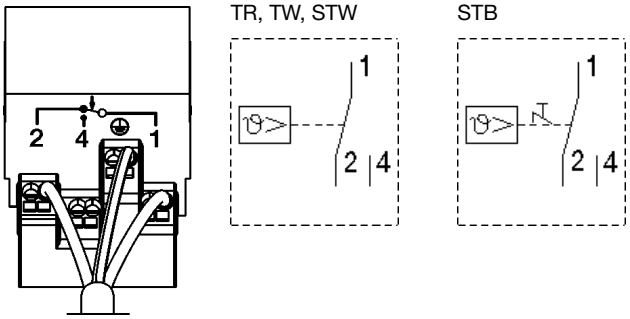

大華高科股份有限公司
www.taiwah.com.tw info@taiwah.com.tw
台北 TEL: (02)2592-5119 FAX: (02)2592-3577
台中 TEL: (04)2707-2269 FAX: (04)2707-1799
台南 TEL: (06)243-2338 FAX: (06)243-2339

Devices in stock: JUMO heatTHERM-AT

Temperature controller TR, type 5

Type 603070/0001[a]

- Protection type IP54
- Compensation of the ambient temperature
- Individual limitation of the control range

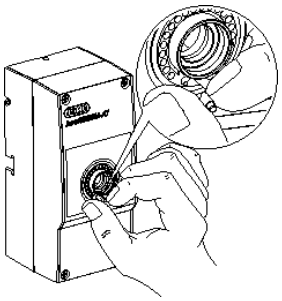

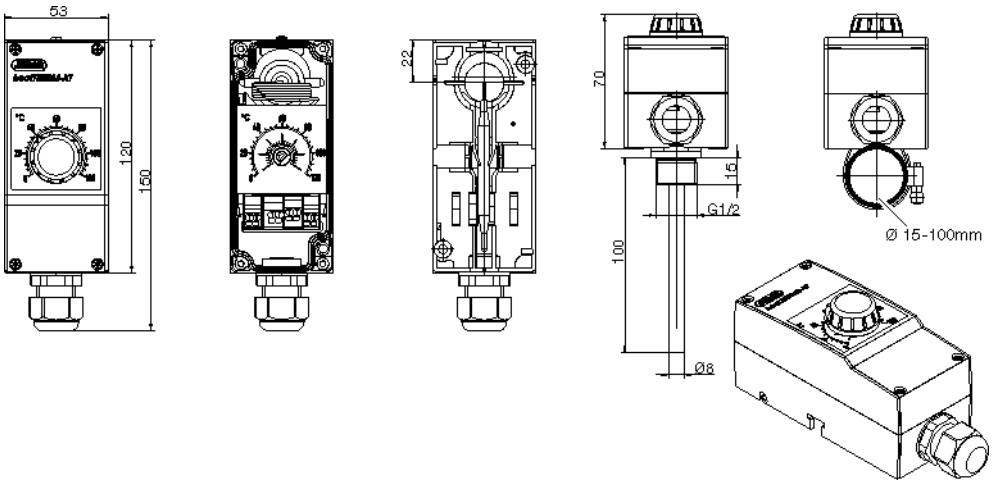

Part no.	Type	Control range °C	Capillary mm	Probe–Ø (d) × L mm	Switching differential	Process connection
60003185	JUMO heatTHERM-AT/ 0001	0 to +120	2000	6 × 87	Approx. 3 K	With internal capillary and contact probe
60003186						Thermowell U 4, brass nickel-plated

[a] Further design versions (control range, switching differential, process connection) upon request - minimum order quantity 100 pieces. Thermowells page 15.

Temperature monitor TW

Type 603070/0002[a]

- Protection type IP54
- Compensation of the ambient temperature
- Switching value check through inspection window in the case lid
- UL approval (extra code 061)

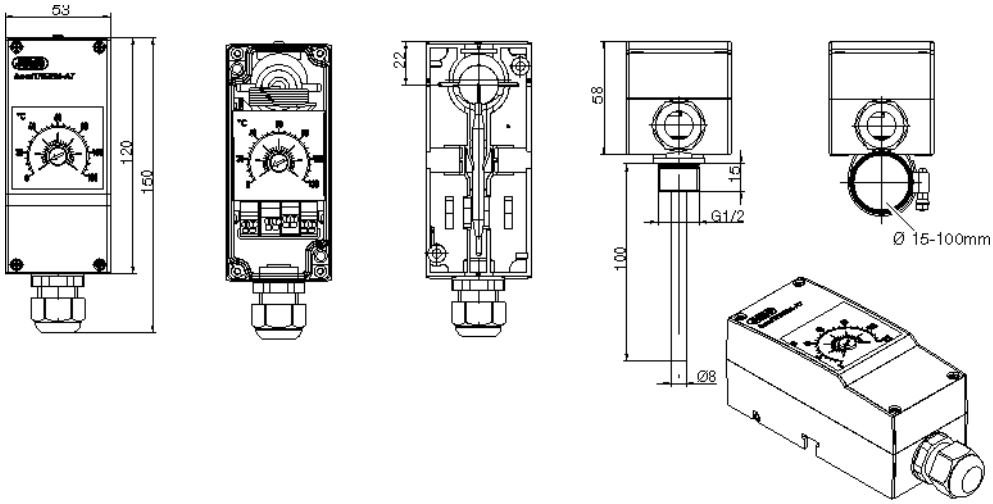

Part no.	Type	Control range °C	Capillary mm	Probe–Ø (d) × L mm	Switching differential	Process connection
60003187	JUMO heatTHERM-AT/ 0002	0 to +120	2000	6 × 87	Approx. 3 K	With internal capillary and contact probe
60003441[b]						
60003188						Thermowell U 4, brass nickel-plated
60003440[b]		0 to +200		6 × 78	Approx. 5 K	With internal capillary and contact probe

[a] Further design versions (control range, switching differential, process connection) upon request - minimum order quantity 100 pieces. Thermowells page 15.
[b] UL approval (extra code 061) page 14.

大華高科股份有限公司
www.taiwah.com.tw info@taiwah.com.tw
台北 TEL: (02)2592-5119 FAX: (02)2592-3577
台中 TEL: (04)2707-2269 FAX: (04)2707-1799
台南 TEL: (06)243-2338 FAX: (06)243-2339

Devices in stock: JUMO heatTHERM-AT

Safety temperature monitor STW, type 5

Type 603070/0020[a]

- Protection type IP54
- Switching value check through inspection window in the case lid
- Compensation of the ambient temperature
- Capillary break protection

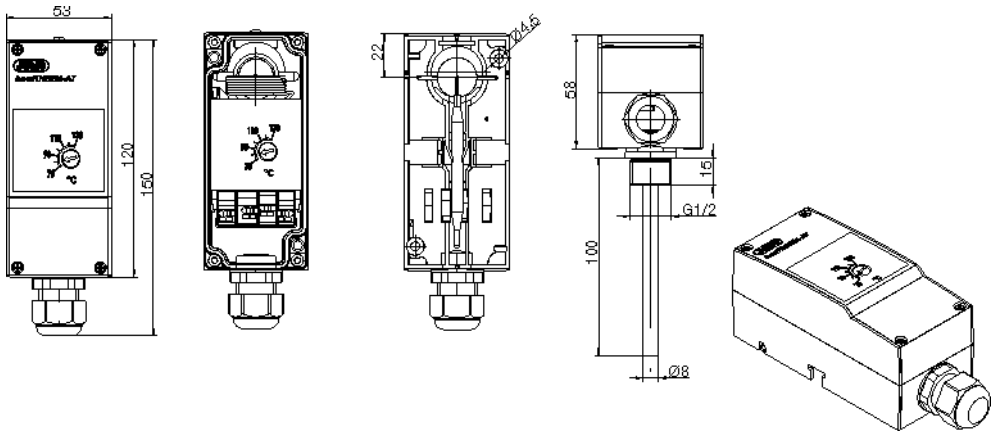

Part no.	Type	Control range °C	Capillary mm	Probe–Ø (d) × L mm	Switching differential	Process connection
60003229	JUMO heatTHERM-AT/ 0020	+20 to +80	2000	6 x 66	Approx. 10 K	With internal capillary and contact probe
60003189		+70 to +130		6 x 66		Thermowell U 4, brass nickel-plated

[a] Further design versions (control range, switching differential, process connection) upon request - minimum order quantity 100 pieces. Thermowells page 15.

Safety temperature limiter STB, type 5

Type 603070/0070[a]

- Protection type IP54
- Switching value check through inspection window in the case lid
- External acknowledgement of the switching point is possible
- Compensation of the ambient temperature
- Capillary break protection
- UL approval (extra code 061)

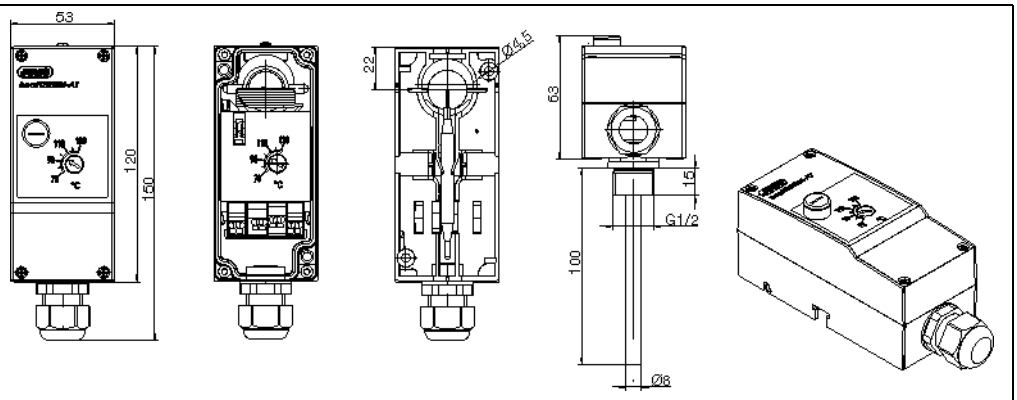

Part no.	Type	Control range °C	Capillary mm	Probe–Ø (d) × L mm	Unlocking difference	Process connection
60003230	JUMO heatTHERM-AT/ 0070	+70 to +130	2000	6 x 66	Approx. 10 K	With internal capillary and contact probe
60003190						Thermowell U 4, brass nickel-plated
60003442[b]		+50 to +300		6 x 85	Approx. 25 K	With internal capillary and contact probe
60003443[b]		+20 to +150		6 x 66	Approx. 15 K	

[a] Further design versions (control range, switching differential, process connection) upon request - minimum order quantity 100 pieces. Thermowells page 15.
[b] UL approval (extra code 061) page 14.

大華高科股份有限公司
www.taiwah.com.tw info@taiwah.com.tw
台 TEL: (02)2592-5119 台 TEL: (04)2707-2269 台 TEL: (06)243-2338
北 FAX: (02)2592-3577 中 FAX: (04)2707-1799 南 FAX: (06)243-2339

Devices in stock: JUMO heatTHERM-AT

Room thermostat temperature controller TR, type 6

Type 603070/0001[a]

- Protection type IP54
- Wall mounting
- Individual limitation of the control range

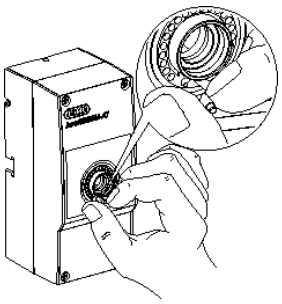

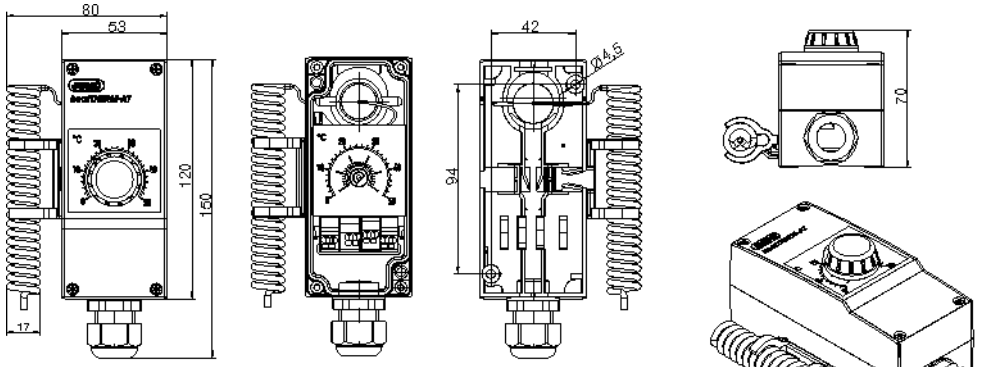

Part no.	Type	Control range °C	Capillary mm	Probe–∅ (d) × L mm	Switching differential	Process connection
60003191	JUMO heatTHERM-AT/ 0001	-10 to +40	- -	- -	1.5 - 2 K	Spiral probe
60003192		0 to +50				

[a] Further design versions (control range, switching differential, process connection) upon request - minimum order quantity 100 pieces. Thermowells page 15.

Room thermostat temperature limiter TW, type 6

Type 603070/0002[a]

- Protection type IP54
- Wall mounting
- Switching value check through inspection window in the case lid

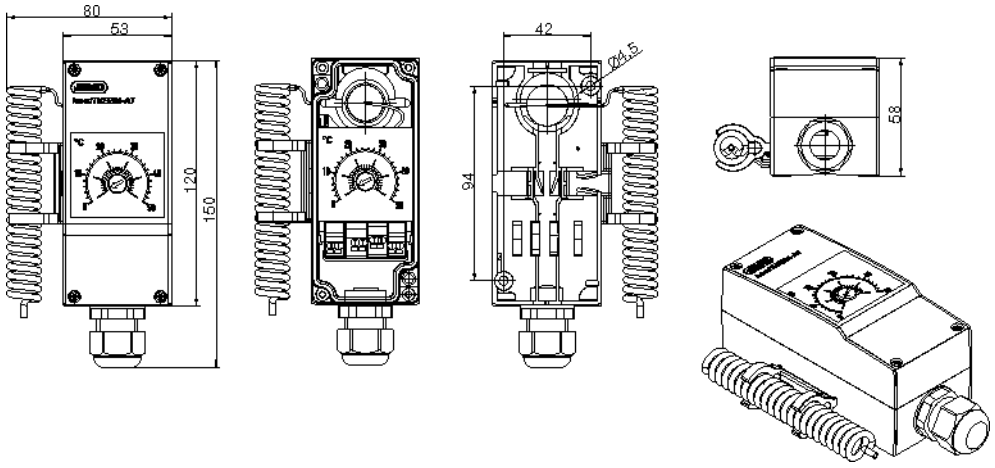

Part no.	Type	Control range °C	Capillary mm	Probe–∅ (d) × L mm	Switching differential	Process connection
60003193	JUMO heatTHERM-AT/ 0002	-10 to +40	- -	- -	1.5 - 2 K	Spiral probe
60003194		0 to +50				

[a] Further design versions (control range, switching differential, process connection) upon request - minimum order quantity 100 pieces. Thermowells page 15.

大華高科股份有限公司
www.taiwah.com.tw info@taiwah.com.tw
台北 TEL: (02)2592-5119 FAX: (02)2592-3577
台中 TEL: (04)2707-2269 FAX: (04)2707-1799
台南 TEL: (06)243-2338 FAX: (06)243-2339

Devices in stock: JUMO heatTHERM-AT

Temperature controller / safety temperature monitor TR/STW, type 5

Type 603070/0120[a]

- Protection type IP54
- Switching value check through inspection window in the case lid
- Compensation of the ambient temperature
- Capillary break protection for STW

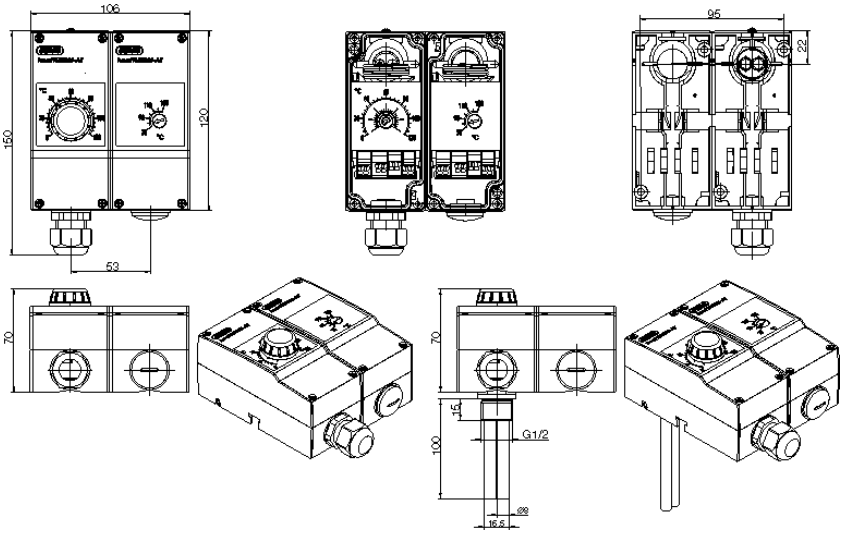

Part no.	Type	Control range °C	Capillary mm	Probe–∅ (d) × L mm	Switching differential	Process connection
60003195	JUMO heatTHERM-AT/ 0120	**TR:** 0 to +120	2000	6 × 87	Approx. 3 K	With internal capillary and contact probe
		STW: 70 to +130		6 x 66	Approx. 10 K	
60003231		**TR:** 0 to +120		6 × 87	Approx. 3 K	Thermowell; brass nickel-plated
		STW: 70 to +130		6 x 66	Approx. 10 K	

[a] Further design versions (control range, switching differential, process connection) upon request - minimum order quantity 100 pieces. Thermowells page 15.

Temperature controller / safety temperature limiter TR/STB, type 5

Type 603070/0170[a]

- Protection type IP54
- Switching value check through inspection window in the case lid
- Compensation of the ambient temperature
- Capillary break protection for STW

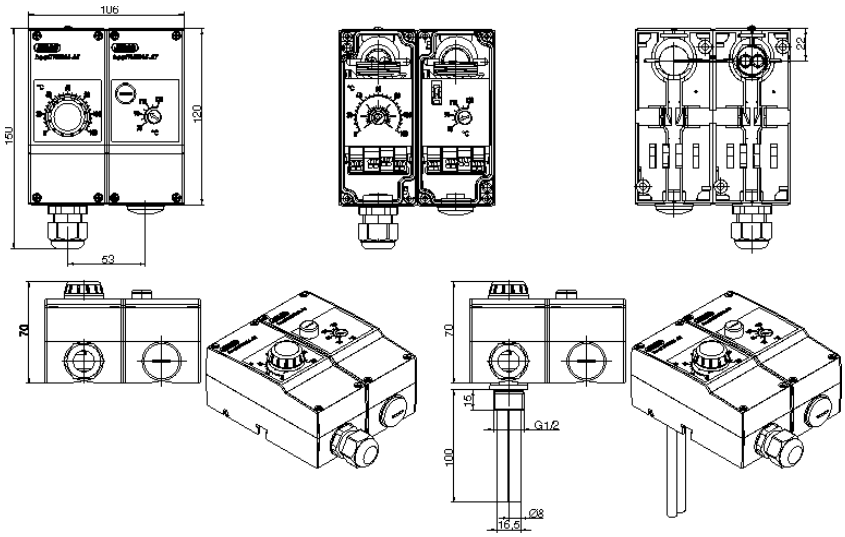

Part no.	Type	Control range °C	Capillary mm	Probe–∅ (d) × L mm	Switching differential/ unlocking difference	Process connection
60003196	JUMO heatTHERM-AT/ 0170	**TR:** 0 to +120	2000	6 × 87	Approx. 3 K	With internal capillary and contact probe
		STB: 70 to +130		6 x 66	Approx. 10 K	
60003232		**TR:** 0 to +120		6 × 87	Approx. 3 K	Thermowell; brass nickel-plated
		STB: 70 to +130		6 x 66	Approx. 10 K	

[a] Further design versions (control range, switching differential, process connection) upon request - minimum order quantity 100 pieces. Thermowells page 15.

大華高科股份有限公司
www.taiwah.com.tw info@taiwah.com.tw
台 TEL: (02)2592-5119 台 TEL: (04)2707-2269 台 TEL: (06)243-2338
北 FAX: (02)2592-3577 中 FAX: (04)2707-1799 南 FAX: (06)243-2339

Devices in stock: JUMO heatTHERM-AT

Room thermostat temperature monitor / temperature monitor TW/TW, type 6

Type 603070/0202[a]

- Protection type IP54
- Wall mounting
- Switching value control through inspection window in the case lid

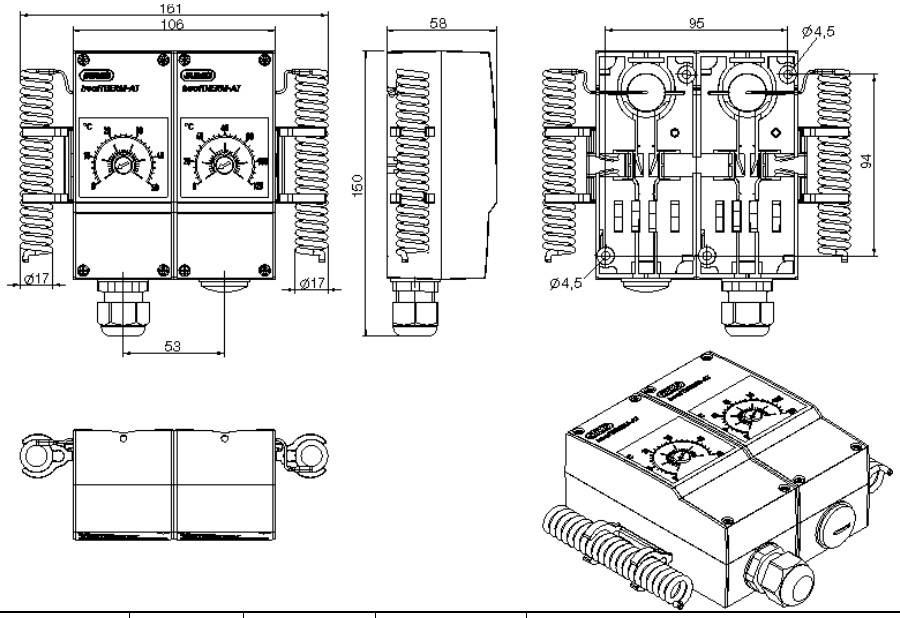

Part no.	Type	Control range °C	Capillary mm	Probe–∅ (d) × L mm	Switching differential	Process connection
60003212	JUMO heatTHERM-AT/ 0202	-10 to +40	- -	- -	1.5 - 2 K	Spiral probe
60003213		0 to +50				

[a] Further design versions (control range, switching differential, process connection) upon request - minimum order quantity 100 pieces. Thermowells page 15.

Flue gas temperature monitor with mounting sleeve, design 5

Type 603070/0020[a]

- Switching value check through inspection window in the case lid
- Max. allowable probe temperature +600 °C
- Approval as ATW with capillary break protection according to DIN EN 14597
- Time constant t0.632 ≤ 45 sec. in flue gas

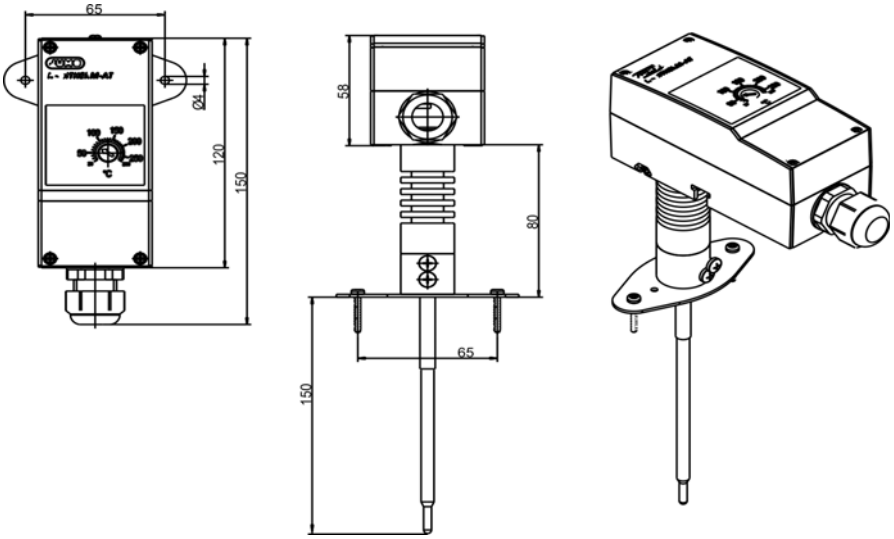

Part no.	Type	Control range °C	Capillary mm	Probe–∅ (d) × L mm	Switching differential	Process connection
60003390	JUMO heatTHERM-AT/ 0020	+20 to +280	- -	6 x 150 mm	Approx. 35 K	Intermediate piece with mounting flange

[a] Further design versions (control range, switching differential, process connection) upon request - minimum order quantity 100 pieces. Thermowells page 15.

大華高科股份有限公司
www.taiwah.com.tw info@taiwah.com.tw
台北 TEL: (02)2592-5119 FAX: (02)2592-3577
台中 TEL: (04)2707-2269 FAX: (04)2707-1799
台南 TEL: (06)243-2338 FAX: (06)243-2339

Devices in stock: JUMO heatTHERM-DR

Thermostat for DIN rail installation TH35, according to DIN EN 60715, type 7

Type 603070/....-[a]

- Protection type IP20
- DIN rail installation TH35
- Easy to assemble and user friendly

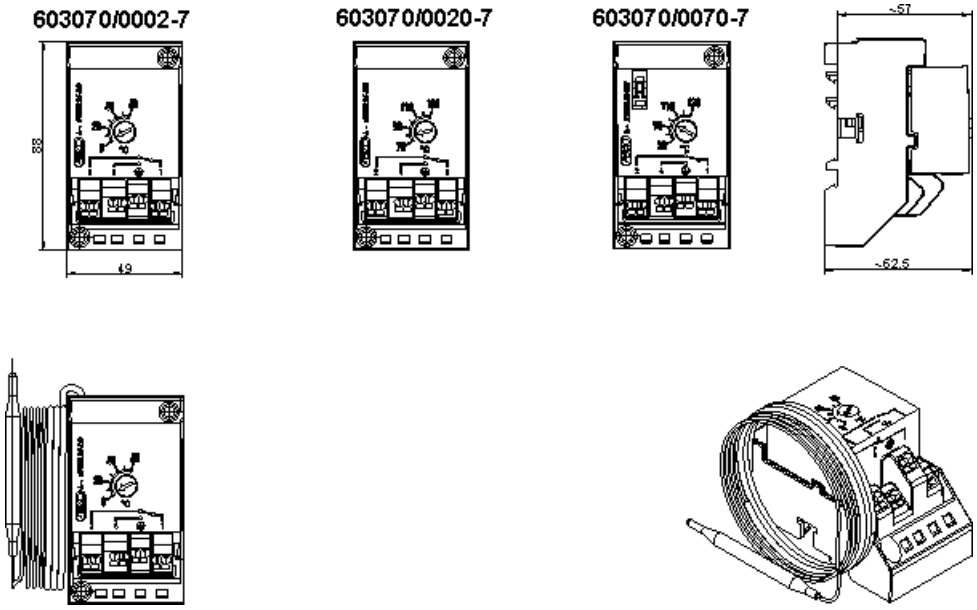

Part no.	Type	Control range °C	Capillary mm	Probe–∅ (d) × L mm	Switching differential	Process connection
Temperature monitor TW						
60003283	603070/0002	0 to +120	2000	6 × 87	Approx. 3K	With capillary and contact probe
60003284	603070/0002	0 to +200		6 x 78	Approx. 5 K	
60003285	603070/0002	+50 to +300		6 x 66	Approx. 6 K	
Safety temperature monitor STW						
60003286	603070/0020	+70 to +130	2000	6 x 66	Approx. 10 K	With capillary and contact probe
Safety temperature limiter STB					Unlocking difference	
60003287	603070/0070	+70 to +130	2000	6 x 66	Approx. 10K	With capillary and contact probe
60003299	603070/0070	+20 to +150		6 × 60	In the upper third approx. 15 K At the scale beginning approx. 30 K	
60003300	603070/0070	+50 to +300		6 × 85	In the upper third approx. 25 K At the scale beginning approx. 45 K	

[a] Further design versions (control range, switching differential, process connection) upon request - minimum order quantity 100 pieces. Thermowells page 15.

大華高科股份有限公司
www.taiwah.com.tw info@taiwah.com.tw
台北 TEL: (02)2592-5119 FAX: (02)2592-3577
台中 TEL: (04)2707-2269 FAX: (04)2707-1799
台南 TEL: (06)243-2338 FAX: (06)243-2339

JUMO heatTHERM-DR

Thermostat for DIN rail installation TH35, according to DIN EN 60715, type 8

Type 603070/0002-8[a]

- Protection type IP20
- DIN rail installation TH35
- Easy to assemble and user friendly

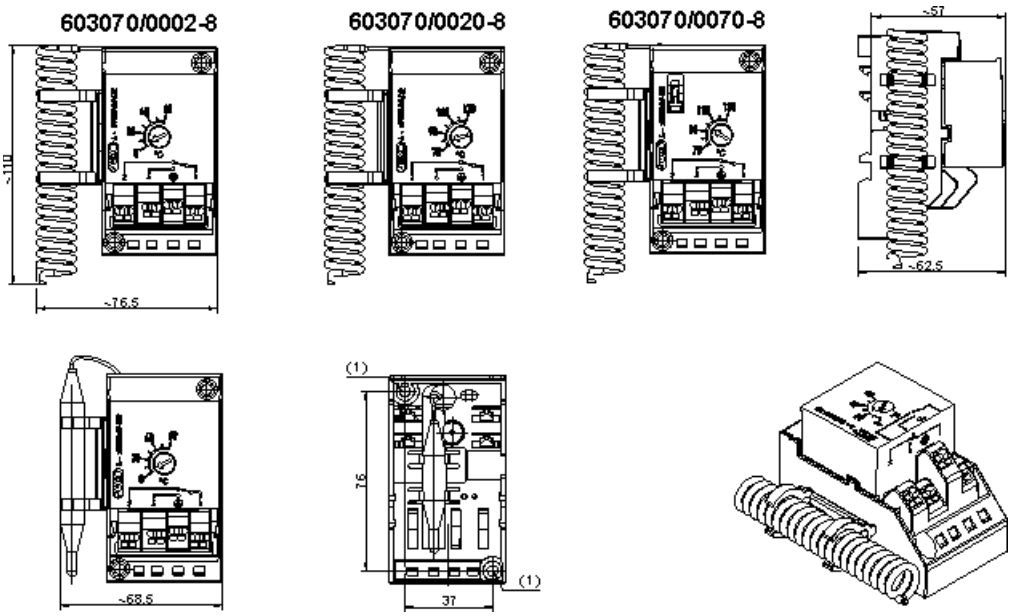

Fastening hole (1)
= ∅ 4.5 mm

[a] Upon request - minimum order quantity 100 pieces.

大華高科股份有限公司
www.taiwah.com.tw info@taiwah.com.tw
台北 TEL: (02)2592-5119 FAX: (02)2592-3577
台中 TEL: (04)2707-2269 FAX: (04)2707-1799
台南 TEL: (06)243-2338 FAX: (06)243-2339

Order details

Surface-mounted thermostat JUMO heatTHERM, type 603070

Minimum purchase order 100 pieces

Order code	(1)	Basic type
603070		JUMO heatTHERM with single-pole snap-action switch

	(2)	Basic type extension
0001		Temperature controller (TR)
0002		Temperature monitor (TW)
0020		Safety temperature monitor (STW) or flue gas temperature monitor (ATW)
0070		Safety temperature limiter (STB)
0120		Temperature controller / safety temperature monitor (TR/STW)
0170		Temperature controller / safety temperature limiter (TR/STB)
0202		Temperature monitor / temperature monitor (TW/TW)

	(3)	Type	
5			Surface-mounted thermostat, with thermowell, flange sleeve, capillary, or as contact probe
6			surface-mounted room thermostat, with spiral probe
7			DIN rail thermostat, with capillary
8			DIN-rail room thermostat, with spiral probe

	(4)	Control range / limit value range 1 [°C]		
016		-10 to +40	TR, TW	
021		0 to +50	TR, TW	
026		0 to +120	TR, TW	
028		0 to +200	TR, TW, STB	
040		+20 to +80	STW	
043		+20 to +150	TR, TW, STB	
064		+50 to +300	TR, TW, STB	With thermowell, select process connection 76
671		+70 to +130	STW, STB	
384		+20 to +280	ATW	Only with process connection 80
		Further control ranges / limit value ranges up to 350 °C upon request (up to +500 °C without approval)		

	(5)	Control range / limit value range 2 [°C]		
000		Single thermostat		
016		-10 to +40	TR, TW	Adjustable
021		0 to +50	TR, TW	Adjustable
671		+70 to +130	STW, STB	Adjustable
		Further control ranges / limit value ranges up to 350 °C upon request (up to +500 °C without approval)		

	(6)	Limit value 1 STW/STB
000		for adjustable control range
095		95 °C
100		100 °C
110		110 °C

大華高科股份有限公司
www.taiwah.com.tw info@taiwah.com.tw
台北 TEL: (02)2592-5119 FAX: (02)2592-3577
台中 TEL: (04)2707-2269 FAX: (04)2707-1799
台南 TEL: (06)243-2338 FAX: (06)243-2339

Order details

Surface-mounted thermostat JUMO heatTHERM, type 603070

Order code	(7)	Limit value 2 STW/STB	
000		for adjustable control range	
095		95 °C	
100		100 °C	
110		110 °C	

	(8)	Switching differential 1	
00		Without switching differential (STB)	
25		2.5 %	of the scale range
70		7 %	of the scale range

	(9)	Switching differential 2	
00		Without switching differential (STB)	
25		2.5 %	of the scale range
70		7 %	of the scale range

	(10)	Capillary length 1	
0		0 mm	only for room thermostat
2000		2000 mm	
		Special length upon request	

	(11)	Capillary length 2	
0		0 mm	only for room thermostat
2000		2000 mm	
		Special length upon request	

	(12)	Material of capillary 1	
00		Without capillary	
20		CrNi	Stainless steel
40		Cu	Copper

	(13)	Material of capillary 2		
00		Without capillary		Single thermostat
20		CrNi	Stainless steel	
40		Cu	Copper	

	(14)	Process connection	
10		Plain cylindrical probe / contact probe	
15		Spiral probe	
80[a]		Intermediate piece with mounting flange	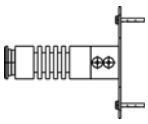
76[b]		Intermediate piece	

[a] Only control ranges +20 to +280 °C (ATW) selectable.
[b] As of a control range value larger than 150 °C, select process connection 76 for mounting with thermowell. Select thermowell according to data sheet 606710, screw-in sleeve "20" with G1/2 thread made out of stainless steel (CrNi).

Order details

Surface-mounted thermostat JUMO heatTHERM, type 603070

Order code	(15)	Diameter 1	
6		∅ 6 mm	
17		∅ 17 mm	Spiral probe for room thermostat (with process connection 15)

	(16)	Diameter 2	
00		Single thermostat	
6		∅ 6 mm	
17		∅ 17 mm	Spiral probe for room thermostat (with process connection 15)

	(17)	Probe material 1	
20		CrNi	Stainless steel
40		Cu	Copper

	(18)	Probe material 2	
00		Single thermostat	
20		CrNi	Stainless steel
40		Cu	Copper

	(19)	Capillary insulation
00		No protective tube
13		PVC tube, black

	(20)	Insulation length (from case)
0		No protective hose
460		460 mm
		Special length upon request

	(21)	Extra codes[a]
000		Without extra codes
061		With UL approval
402		Case protection type IP54
702		Snap-action switch, gold-plated
749		Setting range with 250 angular degrees (only STB/STW)
758		Tightening band for contact probe

[a] List extra codes in sequence, separated by commas.

Order code

(1)	(2)	(3)	(4)	(5)	(6)	(7)	(8)	(9)	(10)	(11)	(12)	(13)	(14)	(15)	(16)	(17)	(18)	(19)	(20)	(21)
603070 /		-	-	-	-	-	-	-	-	-	-	-	-	-	-	-	-	-	- /	, . . .

Order example

603070 /	0001	- 5	- 021	- 671	- 000	- 000	- 70	- 00	- 2000	- 00	- 40	- 00	- 10	- 6	- 00	- 20	- 20	- 00	- 0	/ 000[a]	, . . .

[a] List extra codes in sequence, separated by commas.

大華高科股份有限公司
www.taiwah.com.tw info@taiwah.com.tw
台北 TEL: (02)2592-5119 FAX: (02)2592-3577
台中 TEL: (04)2707-2269 FAX: (04)2707-1799
台南 TEL: (06)243-2338 FAX: (06)243-2339

Accessories

(according to product group 606710)

Thermowell set Suitable for **1 probe**	Thermowell with sealing collar				Clamp for strain relief	Plate for surface-mounted thermostat	Screw for surface-mounted thermostat
	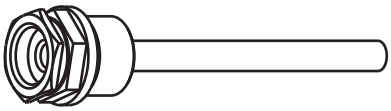					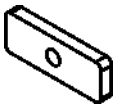	
Part no.	Type	Abbreviation	Connection	∅ sleeve × fitting length EL		Material	Pressure loading capacity at +150 °C
60003177	Thermowell for JUMO heatTHERM, 1 probe	28	G 1/2	8 × 100 mm		Brass/ nickel-plated	48 bar
60003203				8 x 150 mm			
60003171				8 x 200 mm			
60003172				8 × 100 mm		Stainless steel / 1.4571	88 bar
60003205				8 x 150 mm			
60003173				8 x 200 mm			

Thermowell set Suitable for **2 probes**	Thermowell with sealing collar				Clamp for strain relief	Plate for surface-mounted thermostat	Screw for surface-mounted thermostat
	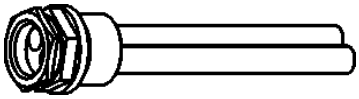					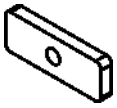	
Part no.	Type	Abbreviation	Connection	∅ sleeve × fitting length EL		Material	Pressure loading capacity at +150 °C
60003178	Thermowell for JUMO heatTHERM, 2 probes	29	G 1/2	2 × 8 × 100 mm		Brass / nickel-plated	48 bar
60003204				2 x 8 x 150 mm			
60003174				2 x 8 x 200 mm			

Thermowell set Suitable for **2 probes**	Thermowell with sealing collar			Pressure spring	Clamp for strain relief	Plate for surface-mounted thermostat	Screw for surface-mounted thermostat
	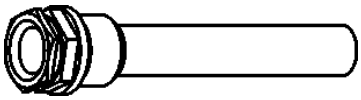					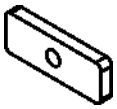	
Part no.	Type	Abbreviation	Connection	∅ sleeve × fitting length EL		Material	Pressure loading capacity at +150 °C
60003175	Thermowell for JUMO heatTHERM, 2 probes	49	G 1/2	15 × 100 mm		Stainless steel / 1.4571	48 bar
60003206				15 x 150 mm			
60003176				15 x 200 mm			

Adapter piece for thermowell [a]		Material	
Part no.			
00507273		Steel / nickel-plated	

[a] necessary for thermowell with process connection "20" or "23".