Pitot tube
Type L

CE

Pitot tube Type **L**

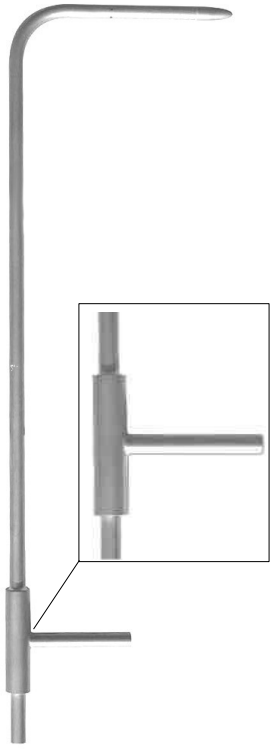

Pitot tube with ellipsoidal head.
An intake for total pressure and 6 holes for static pressure.
Body made of stainless steel.

Pitot tube Type **L** with **TC K**

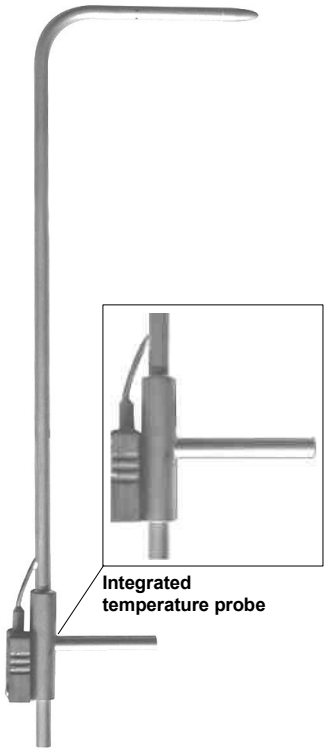

Pitot tube with ellipsoidal head.
An intake for total pressure and 6 holes for static pressure.
Sheathed thermocouple K probe integrated, with connection cable length 1,5 m.
Body made of stainless steel.

Features

Norm	AFNOR NFX10-112. Annex 4 dated 14.9.77. This norm meets the requirements of the International Norm ISO 3966.
Model	NPL curved with ellipsoidal head
Coefficient	1,0015±0,01
Accuracy	Better than 1 %, for a ± 10 ° alignment to the fluid flow.
Quality	stainless steel 316 L
Operating temperature	from 0 to 600 °C in standard and up to 1000 °C in option (except Ø 3 mm).

- The extent error of an air velocity or airflow measurement with a KIMO Pitot tube remains inferior to 2%, when being carried out as per the NFX10-112 norm.
- It is recommended to carry out a calibration of the Pitot tube, in order to determine its exact coefficient.

Presentation

KIMO offers a wide range of high-quality and accurate **Pitot tubes**, as per the AFNOR NFX 10-112 norm.

These **Pitot tubes**, when being connected to a differential column / or needle / or electronical manometer, can measure the dynamic pressure of a moving fluid in a duct, and then can deduct its air velocity in m/s and its airflow in m3/h.

These **Pitot tubes** are used in HVAC field, vacuum cleaning and pneumatical transport. They are mainly dedicated to measure hot and particle-charged air, and also high air velocity.

Dimensions

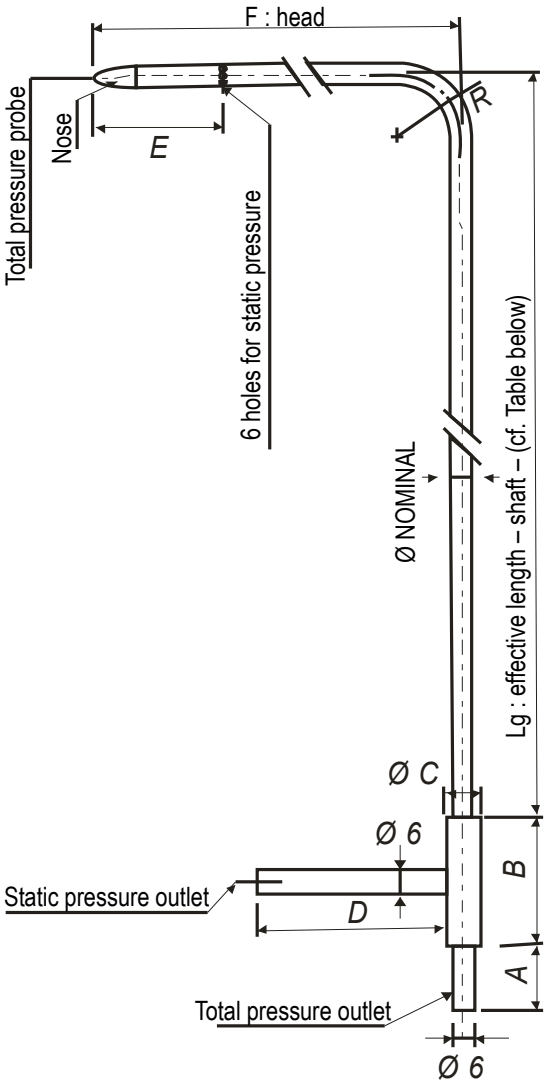

Pitot tube Type **L**

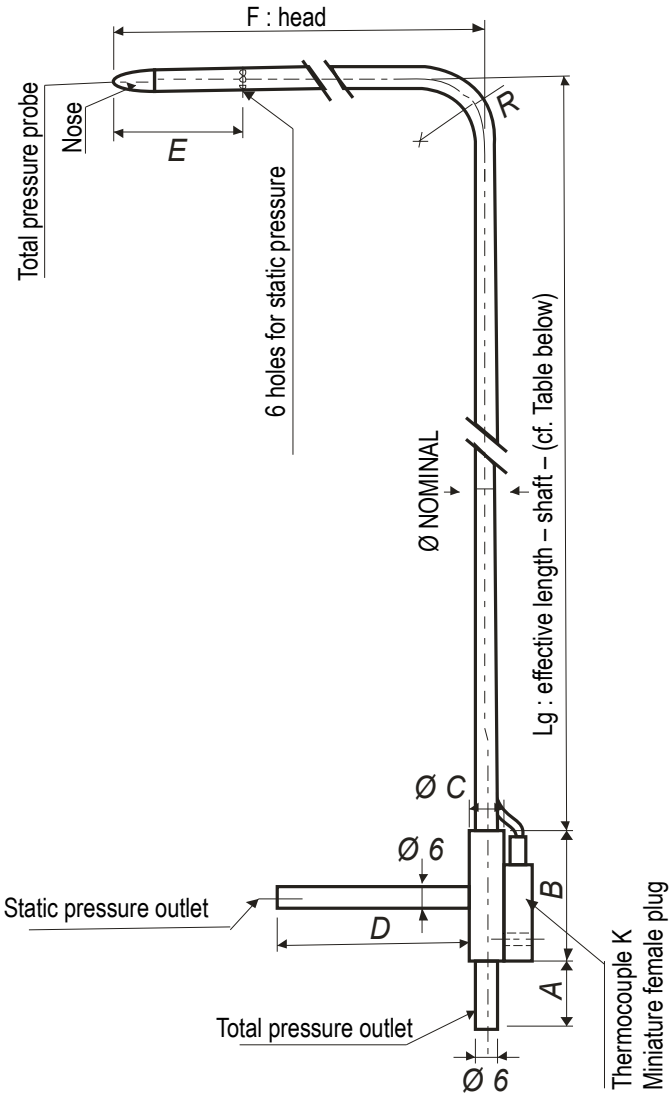

Pitot tube Type **L** with **TC K**

	A	B	ØC	D	E	F	R
Pitot tube Ø 3 mm	17	32	10	30	25	48	9
Pitot tube Ø 6 mm	25	40	10	45	48	96	18
Pitot tube Ø 8 mm	25	40	10	45	64	128	24
Pitot tube Ø 12 mm	25	50	16	60	96	192	36
Pitot tube Ø 14 mm	25	50	16	60	112	224	42

Ranges

Pitot tube Type **L**

Diameter	Reference	Length
Ø 3 mm	TPL-03-100 TPL-03-200 TPL-03-300	100 mm 200 mm 300 mm
Ø 6 mm	TPL-06-300 TPL-06-500 TPL-06-800	300mm 500 mm 800 mm
Ø 8 mm	TPL-08-1000 TPL-08-1250	1000 mm 1250 mm
Ø 12 mm	TPL-12-1500 TPL-12-2000	1500 mm 2000 mm
Ø 14 mm	TPL-14-2500 TPL-14-3000	2500 mm 3000 mm

Pitot tube Type **L** with **TC K**

Diameter	Reference	Length
Ø 3 mm	TPL-03-100-T TPL-03-200-T TPL-03-300-T	100 mm 200 mm 300 mm
Ø 6 mm	TPL-06-300-T TPL-06-500-T TPL-06-800-T	300 mm 500 mm 800 mm
Ø 8 mm	TPL-08-1000-T TPL-08-1250-T	1000 mm 1250 mm
Ø 12 mm	TPL-12-1500-T TPL-12-2000-T	1500 mm 2000 mm
Ø 14 mm	TPL-14-2500-T TPL-14-3000-T	2500 mm 3000 mm

Operating

The **Pitot tube** must be introduced perpendicularly into the duct, in several points pre-determined (see table “location of measuring points”).
The head (ending with an ellipsoidal nose) must be maintained parallel and facing the flow.
The total pressure (+) catched by the nose, is connected to the + of the manometer
The static pressure (-) catched by the holes of the head, is connected to the - of the manometer.
The connection cable of the thermocouple K probe is connected to the thermocouple K inlet of the manometer (only on the **Pitot type L with TC K**).

Then, the instrument can display the dynamic pressure, also named “velocity pressure”.
The dynamic pressure corresponds to the difference between the total pressure and the static pressure : Pd = Pt - Ps

Schema

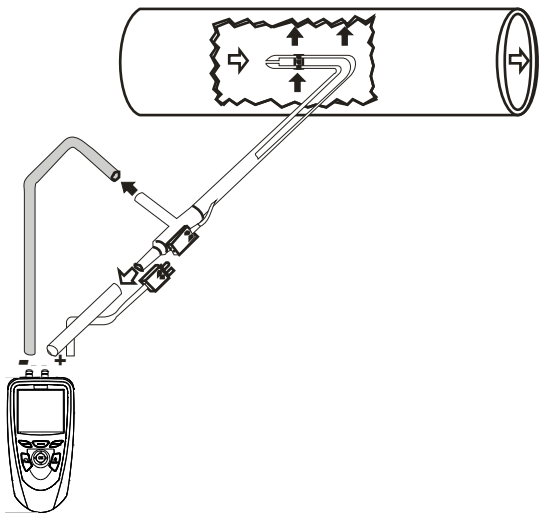

⇨ Total pressure (Pt)
➡ Static pressure (Ps

Dynamic pressure = Pt - Ps

Example :

The manometer model MP200 directly displays the velocity in m/s.

Location of measuring points

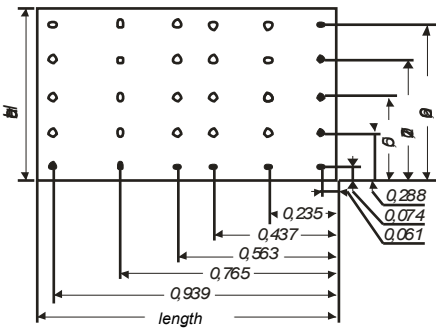

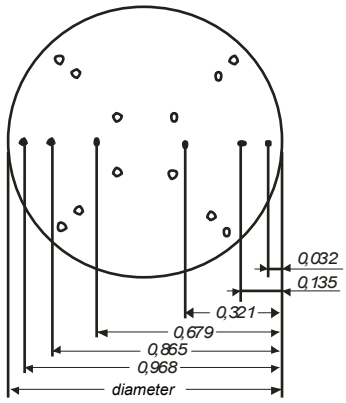

With the dynamic pressure in mm H_2O or in Pa, we can calculate the air velocity in m/s, with the simplified BERNOULLI formula :

V in m/s à 20 °C : $1{,}291\sqrt{\textbf{Pd} \text{ in Pa}}$

or

V in m/s : $\mathbf{4{,}05}\sqrt{\Delta\ \textbf{P} \text{ en mm CE}}$

Formula to get the velocity,
with temperature balancing of the airflow :

$$\textbf{V} \text{ in m/s} = \textbf{K} \times \sqrt{\frac{574{,}2\ \Theta + 156842{,}77}{Po}} \times \sqrt{\Delta\ \textbf{P} \text{ in Pa}}$$

With

Po = barometric pressure in Pa
Θ = temperature in °C
K = coefficient of the Pitot tube

Accessories

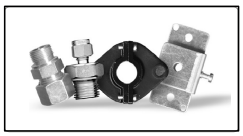

- Connection glands made of nickel plated brass (to install the Pitot tube in a fixed location)
- Clamp made of stainless steel and cast iron
- Sliding connections with nipple, made of stainless steel of Teflon
- Extension cable for thermocouple K class 1 :
- Rubber sealing caps : come in a 10-unit bag
- Caps : come in a 10-unit bag
- Graduation (mm) red-marked on the shaft
- Tubes

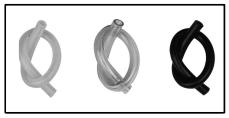

- Straight **Pitot tube type L** and **type L with TC K** :
  You can directly make the measurements by plunging this tube into the air duct.
  Diameters and dimensions : same as the **Pitot tube** NPL curved.

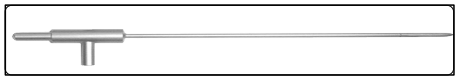

Feel free to contact KIMO for any special case, any special manufacturing.

大華高科股份有限公司
www.taiwah.com.tw info@taiwah.com.tw
台北 TEL: (02) 2592 - 5119 Fax: (02) 2592- 3577
台中 TEL: (04) 2707 - 2269 Fax: (04) 2707- 1799
台南 TEL: (06) 243 - 2338 Fax: (06) 243 - 2339